Model
740AJ
ARTICULATING BOOM LIFTS

MORE ECONOMIC
- Lower hydrocarbon, carbon monoxide, particulate and NOx emissions with Stage IIIB-compliant engine.

MORE PRODUCTIVE
- Equipped with hydrostatic drive for easy, precise, infinitely-variable-speed manoeuvrability.

MORE ACCESS
- Conquer rough terrain with standard oscillating axle and four-wheel drive, delivering optimised grip and stability.Work safely up to 2 m from basket and 270-degrees around with Fall Arrest platfom.

SMART DESIGN
- Customer-preferred controls mean fewer buttons and switches used to position the platform and less time spent learning to use the platform controls.

Standard Features

- 0.91 m x 1.83 m low mount fall arrest platform
- Rear entry with hinged mid rail
- Multiple function operation
- Full proportional drive joystick control with integral thumb steer switch
- Full proportional main boom and swing joystick control
- Multiple speed control for lower boom, telescope and platform rotate
- Selectable creep speed on drive, lift and swing functions
- 1.83 m articulting jib
- 180 degree powered platform rotator
- Platform console machine status light panel [1]
- Load sensing system
- AC power cable to platform
- Engine distress warning / shut down system [2]
- Gull-wing turntable hoods
- 144 km/h jet blast rating to ARP 1328 standard
- 3 degree tilt alarm and indicator light
- Fixed front axle
- Lifting / tie down lugs
- On-board 4,000W generator
- Hourmeter
- Ground control selector switch with key lock
- Platform tool tray
- 12v-DC auxilliary power13 mm Air line to platform
- 4 wheel drive / 4 wheel steer
- Low fuel engine cut-out
- Cast Aluminum Control Box
- Horn
- Hydrostatic drive transmission
- Side entry with drop bar mid rail
- Swing-out engine tray
- Interactive Display at Ground Controls
- Control ADE® Advanced Design Electronics System
- JLG Skyguard active system

[1] Provides indicator lights at platform control console for system distress, low fuel, tilt light and foot switch status.

[2] Low oil pressure and high coolant temperature alarms with shut down enabled / disabled by analyser

Standard Specifications

Power Source	
• Diesel Engine	Deutz TD 2.9 L4 50kW
• Fuel Tank Capacity	151 L
Hydraulic System	
• Hydraulic System	151 L
• Auxiliary Power	12V DC
Tyres	
• Tyres (Foam Filled)	18 - 625

Accessories & Options

- All motion alarm
- Alarm package [3]
- Light package [4]
- Head and tail lights
- Flashing amber beacon
- Euro Plug & Socket
- Hostile Environment Kit [5]
- Hydraulic oil cooler
- Soft Touch 0.91 m x 1.83 m Platform Proximity System
- Skyguard beacon (ILOS)
- Tow package
- Arctic package
- Generator hourmeter
- Synthetic Biodegradable Hydraulic Oil
- Platform worklights
- 13mm airline to platform
- Special paint colour

[3] Includes all-motion alarm and flashing amber beacon.

[4] Includes platform mounted work lights and head and tail lights

[5] Includes console cover, boom wipers and cylinder bellows

Model
740AJ
ARTICULATING BOOM LIFTS

Performance

• Working Height	24.55 m
• Platform Height	22.55 m
• Working Outreach	16.45 m
• Horizontal Outreach	15.80 m
• Up and Over Height	7.64 m
• Swing (continuous)	360°
• Platform Capacity – Unrestricted	230 kg
• Platform Rotator (Hydraulic)	180°
• Jib – Overall Length	1.83 m
• Jib - Range of articulation	130° (+70°/ -60°)
A. Platform Size	0.91 m x 1.83 m
B. Overall Width	2.49 m
C. Tailswing (working condition)	0.76 m
D. Stowed Height	3.0 m
E. Stowed Length	11.13 m
F. Wheelbase	3.05 m
G. Ground Clearance	0.28 m
• Machine weight [1/2]	16,420 kg
• Maximum Ground Bearing Pressure	5.9 kg/cm^2
• Drive Speed 4WD	4.8 km/h
• Gradeability 4WD	45%

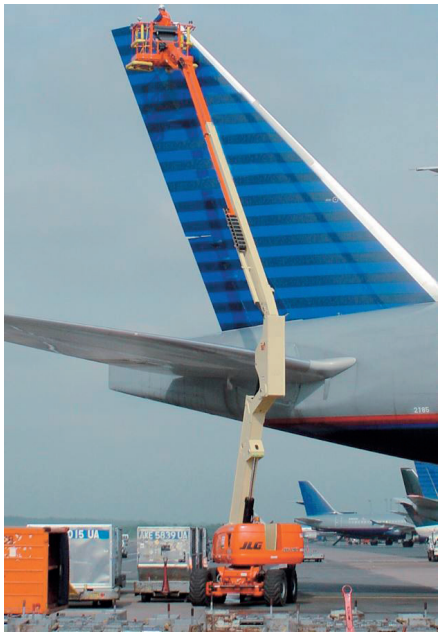

[1] Certain options or country standards may increase weight and/or dimensions

[2] With Standard tires

Reach Diagram

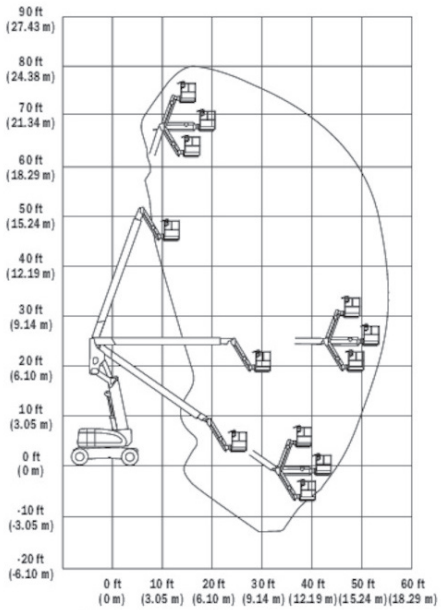

Dimensions

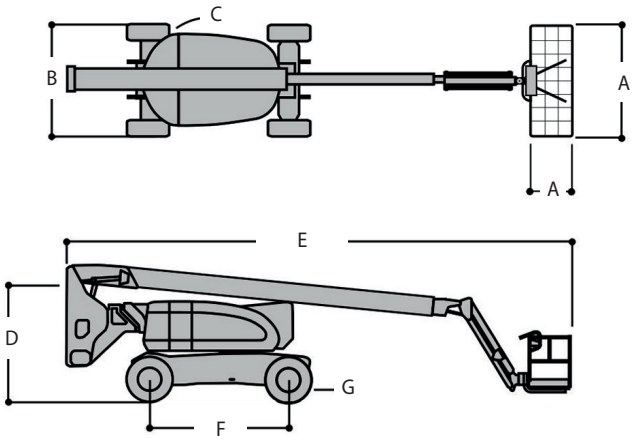

IMPORTANT

JLG is continually researching and developing products and reserves the right to make modifications without prior notice. All data in this document is indicative. Certain options or country standards will increase weight. Specifications may change to meet country standards or with the addition of optional equipment.

JLG EMEA BV
Polaris Avenue 63
2132 JH Hoofddorp
The Netherlands
Tel: +31 (0)23 565 5665
Fax: +31 (0)23 557 3750
www.jlg.com

Due to continuous product improvements, JLG Industries reserves the right to make specification and/or equipment changes without prior notification.

An Oshkosh Corporation Company